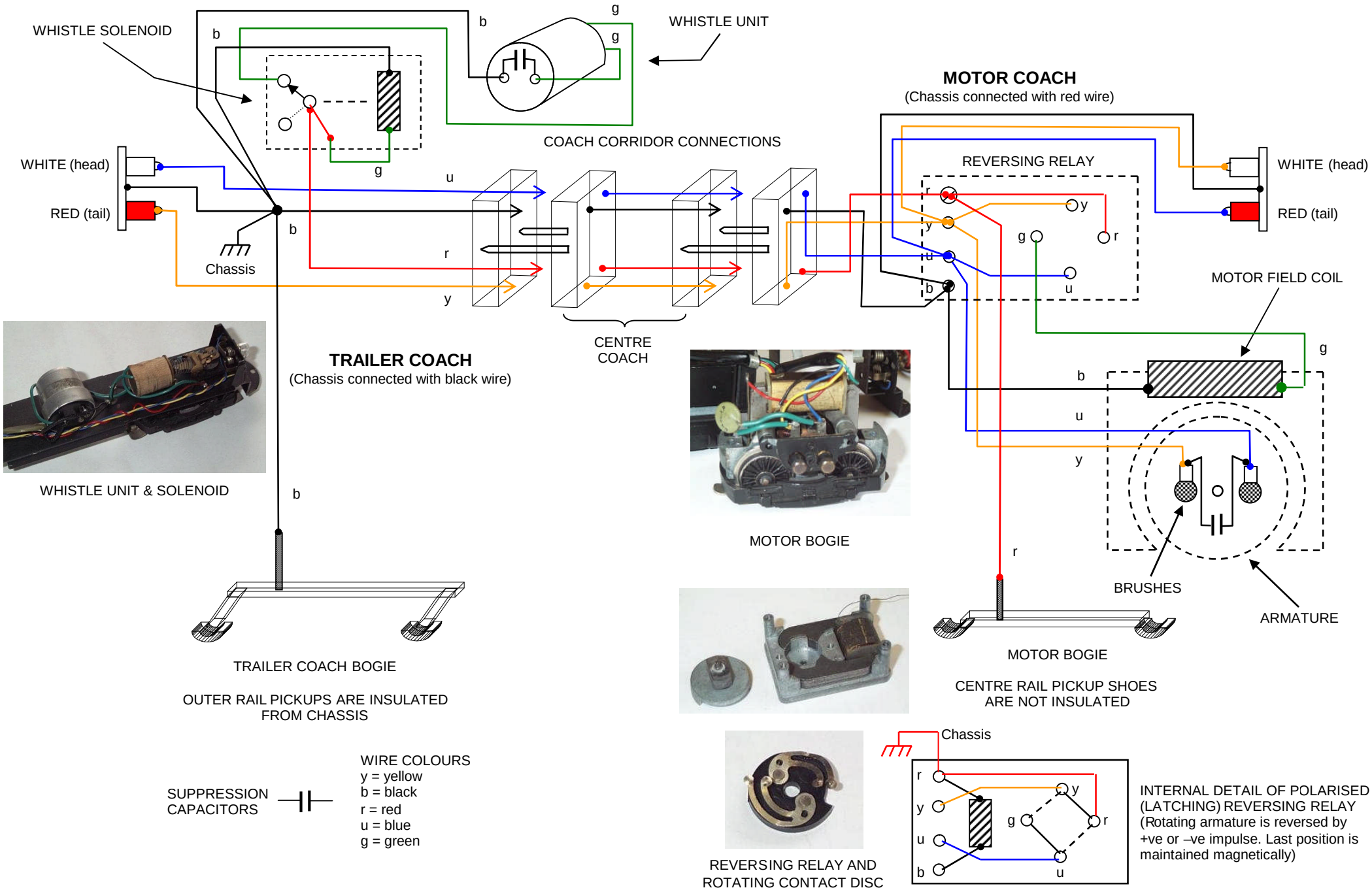PHYSICAL WIRING DIAGRAM FOR TRIX A.C. METEOR WITH WHISTLE Cat. No. 377